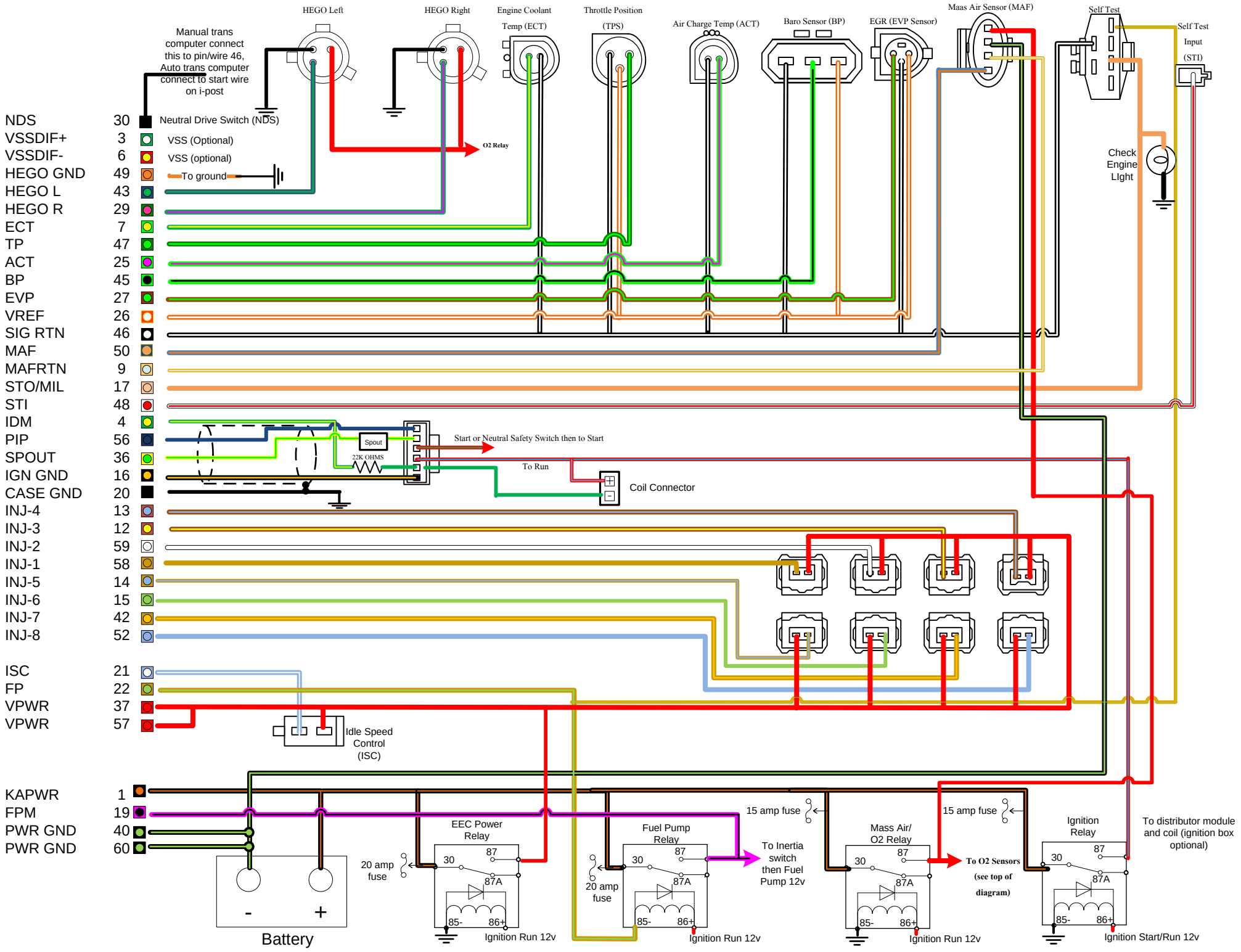
HEGO Left
HEGO Right
Engine Coolant Temp (ECT)
Throttle Position (TPS)
Air Charge Temp (ACT)
Baro Sensor (BP)
EGR (EVP Sensor)
Maas Air Sensor (MAF)
Self Test
Self Test Input (STI)
Manual trans computer connect this to pin/wire 46, Auto trans computer connect to start wire on i-post
NDS 30 Neutral Drive Switch (NDS)
VSSDIF+ 3 VSS (Optional)
VSSDIF- 6 VSS (optional)
HEGO GND 49 To ground
HEGO L 43
HEGO R 29
ECT 7
TP 47
ACT 25
BP 45
EVP 27
VREF 26
SIG RTN 46
MAF 50
MAFRTN 9
STO/MIL 17
STI 48
IDM 4
PIP 56
SPOUT 36
IGN GND 16
CASE GND 20
INJ-4 13
INJ-3 12
INJ-2 59
INJ-1 58
INJ-5 14
INJ-6 15
INJ-7 42
INJ-8 52
ISC 21
FP 22
VPWR 37
VPWR 57
KAPWR 1
FPM 19
PWR GND 40
PWR GND 60
O2 Relay
Check Engine LIght
Spout
22K OHMS
Start or Neutral Safety Switch then to Start
To Run
Coil Connector
Idle Speed Control (ISC)
Battery
20 amp fuse
EEC Power Relay
Ignition Run 12v
Fuel Pump Relay
20 amp fuse
To Inertia switch then Fuel Pump 12v
Ignition Run 12v
15 amp fuse
Mass Air/ O2 Relay
To O2 Sensors (see top of diagram)
Ignition Run 12v
15 amp fuse
Ignition Relay
To distributor module and coil (ignition box optional)
Ignition Start/Run 12v