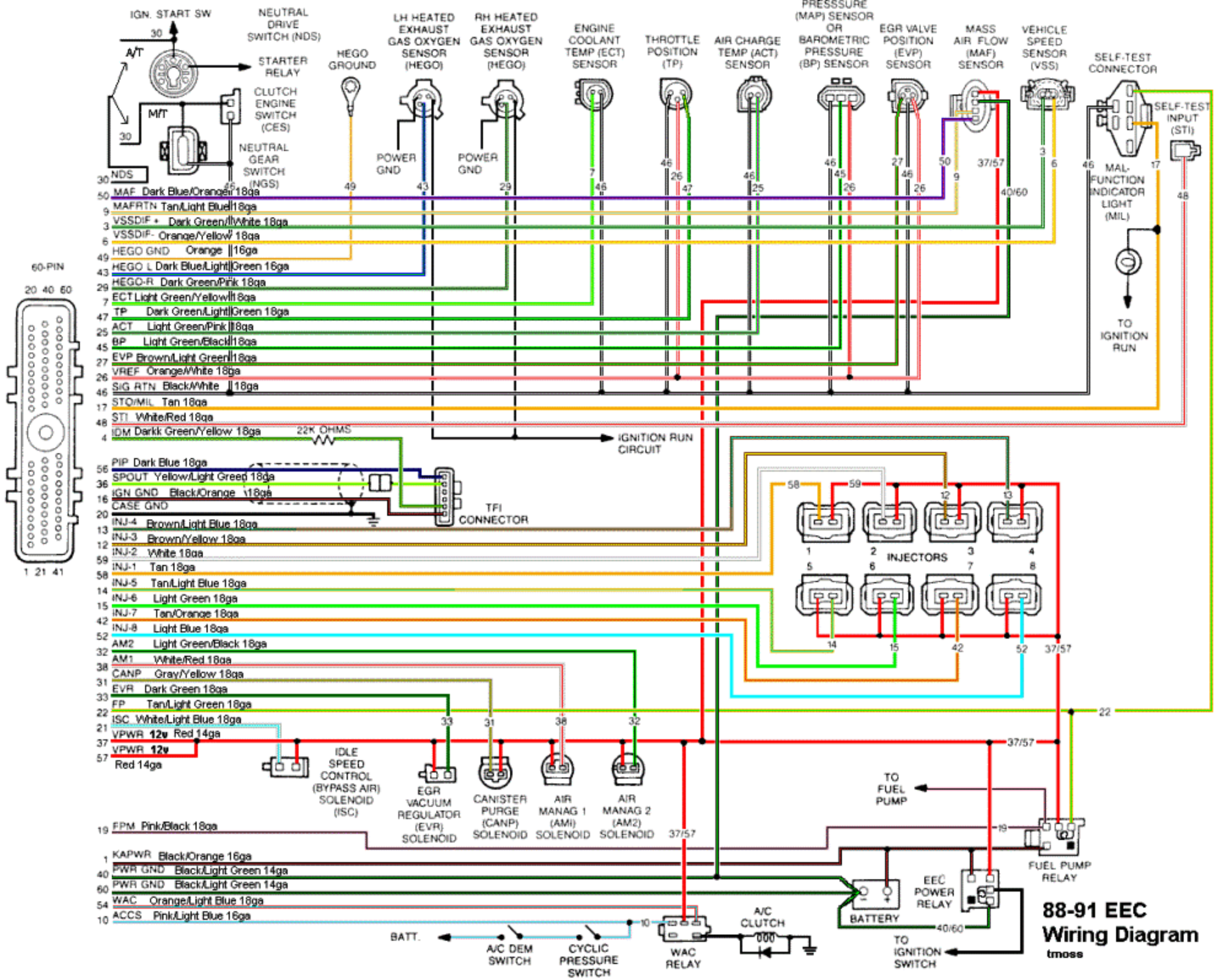
IGN. START SW
30
A/T
M/T
30
NDS
30
STARTER RELAY
CLUTCH ENGINE SWITCH (CES)
NEUTRAL GEAR SWITCH (NGS)
NEUTRAL DRIVE SWITCH (NDS)
HEGO GROUND
LH HEATED EXHAUST GAS OXYGEN SENSOR (HEGO)
RH HEATED EXHAUST GAS OXYGEN SENSOR (HEGO)
ENGINE COOLANT TEMP (ECT) SENSOR
THROTTLE POSITION (TP)
AIR CHARGE TEMP (ACT) SENSOR
PRESSSURE (MAP) SENSOR OR BAROMETRIC PRESSURE (BP) SENSOR
EGR VALVE POSITION (EVP) SENSOR
MASS AIR FLOW (MAF) SENSOR
VEHICLE SPEED SENSOR (VSS)
SELF-TEST CONNECTOR
SELF-TEST INPUT (STI)
POWER GND
POWER GND
MAL-FUNCTION INDICATOR LIGHT (MIL)
TO IGNITION RUN
60-PIN
20 40 60
1 21 41
50 MAF Dark Blue/Orange 18ga
9 MAFRTN Tan/Light Blue 18ga
3 VSSDIF + Dark Green/White 18ga
6 VSSDIF- Orange/Yellow 18ga
49 HEGO GND Orange 16ga
43 HEGO L Dark Blue/Light Green 16ga
29 HEGO-R Dark Green/Pink 18ga
7 ECT Light Green/Yellow 18ga
47 TP Dark Green/Light Green 18ga
25 ACT Light Green/Pink 18ga
45 BP Light Green/Black 18ga
27 EVP Brown/Light Green 18ga
26 VREF Orange/White 18ga
46 SIG RTN Black/White 18ga
17 STO/MIL Tan 18ga
48 STI White/Red 18ga
4 IDM Darkk Green/Yellow 18ga
22K OHMS
IGNITION RUN CIRCUIT
56 PIP Dark Blue 18ga
36 SPOUT Yellow/Light Green 18ga
16 IGN GND Black/Orange 18ga
20 CASE GND
TFI CONNECTOR
13 INJ-4 Brown/Light Blue 18ga
12 INJ-3 Brown/Yellow 18ga
59 INJ-2 White 18ga
58 INJ-1 Tan 18ga
14 INJ-5 Tan/Light Blue 18ga
15 INJ-6 Light Green 18ga
42 INJ-7 Tan/Orange 18ga
52 INJ-8 Light Blue 18ga
32 AM2 Light Green/Black 18ga
38 AM1 White/Red 18ga
31 CANP Gray/Yellow 18ga
33 EVR Dark Green 18ga
22 FP Tan/Light Green 18ga
21 ISC White/Light Blue 18ga
37 VPWR 12v Red 14ga
57 VPWR 12v Red 14ga
INJECTORS
1 2 3 4
5 6 7 8
IDLE SPEED CONTROL (BYPASS AIR) SOLENOID (ISC)
EGR VACUUM REGULATOR (EVR) SOLENOID
CANISTER PURGE (CANP) SOLENOID
AIR MANAG 1 (AM1) SOLENOID
AIR MANAG 2 (AM2) SOLENOID
19 FPM Pink/Black 18ga
1 KAPWR Black/Orange 16ga
40 PWR GND Black/Light Green 14ga
60 PWR GND Black/Light Green 14ga
54 WAC Orange/Light Blue 18ga
10 ACCS Pink/Light Blue 16ga
BATT.
A/C DEM SWITCH
CYCLIC PRESSURE SWITCH
WAC RELAY
A/C CLUTCH
BATTERY
EEC POWER RELAY
FUEL PUMP RELAY
TO FUEL PUMP
TO IGNITION SWITCH
88-91 EEC
Wiring Diagram
tmoss