HORN CONTACT RINGS FOR AFTERMARKET STEERING WHEEL (LECARA)

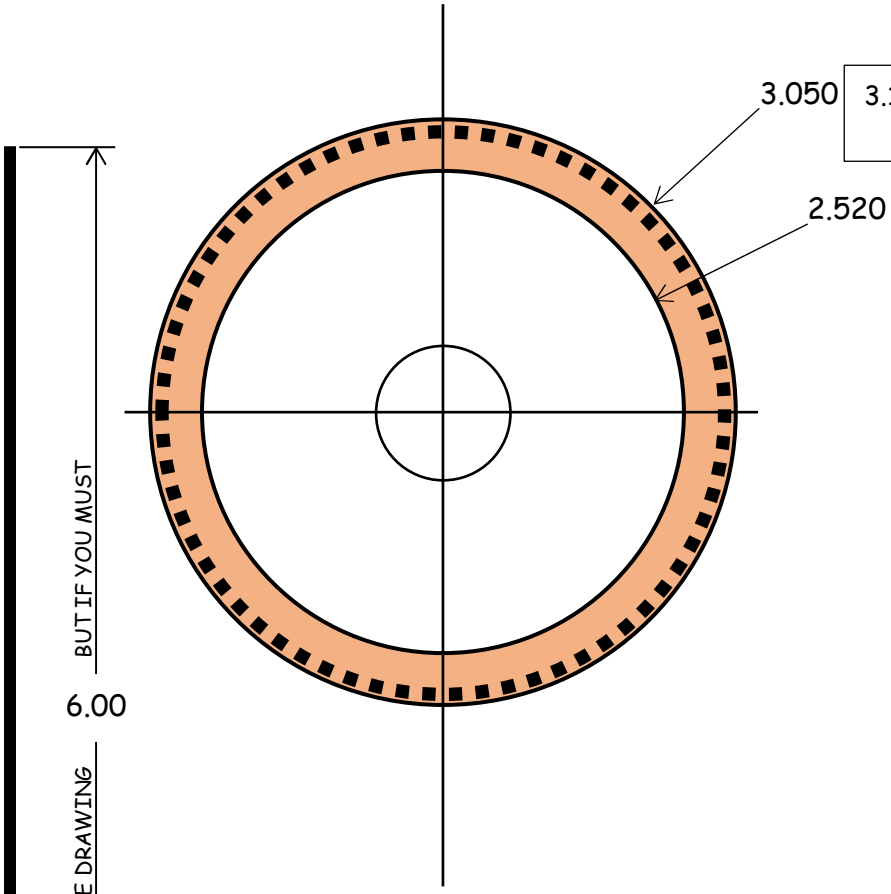

3.150 would be better for contact pin, must be inside collar on hub.

BUT IF YOU MUST

6.00

DO NOT SCALE DRAWING

Centerline of horn contacts are about 2.85 and 2.19" from center of steering shaft.
The contact pins are .186" diameter.
Dashed line is approximate path on copper rings.

Copper rings are .040" thick.

Epoxy used to bond rings to original contacts on adapter. Solder wire to each ring.
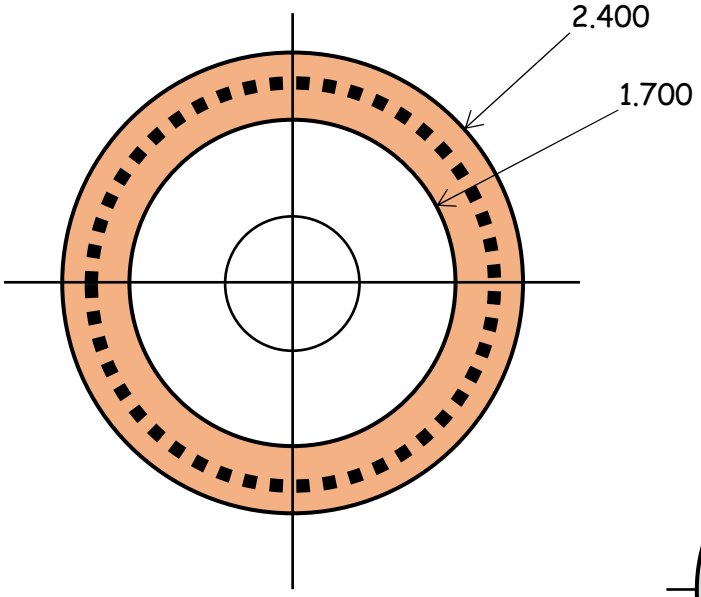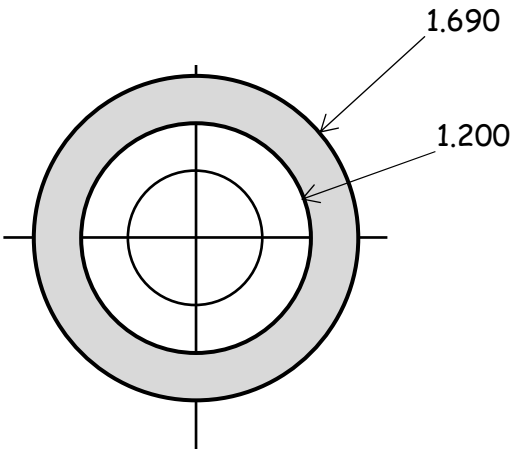
Acrylic spacer (.118 thick) is to center inner ring.