

AR 15* RADIUS ARMS
54-00020 and 54-00021

Kit Parts List
2x adjustable heads
2x head caps
4x ¼" side plates
2x 2"x2"x ¼" arms
2x frame mounting brackets (extended length only)
2x 1" heim joints
4x bushing nuts
2x brake line mounting tabs
1x caster checker tool

Hardware list
8x ¾"bolts
8x ¾" nylock nuts
8x 9/16" bolts
8x 9/16" lock washers
4x 1/2" BOLTS
4x ½" NYLOCK NUTS
2x 1" BOLTS
2x 1" nylock nuts
2x 1" jam nuts

Tools needed
SAE socket set
SAE wrench set
Digital level (about $30 at sears)
Torque wrench

Installation Tips/pointers

You can use or reuse any c bushings available.
When we install these arms at the shop we usually install the head part on the axle, install the arm part on the frame and join them with the ¾'' bolts to the plates.
If you want a different length arm (longer or shorter than stock or extended) you can cut the arm (head side) and re-drill new 3/4" holes.

TORQUE SPEC
¾'' PLATE BOLTS 100Lbs
1'' HEIM TO FRAME JAM NUT 100Lbs
1'' HEIM TO ARM 100Lbs
9/16'' CAP BOLTS 100Lbs
½'' SHOCK BOLTS 50Lbs
7/16'' COIL CUP BOLTS 50Lbs

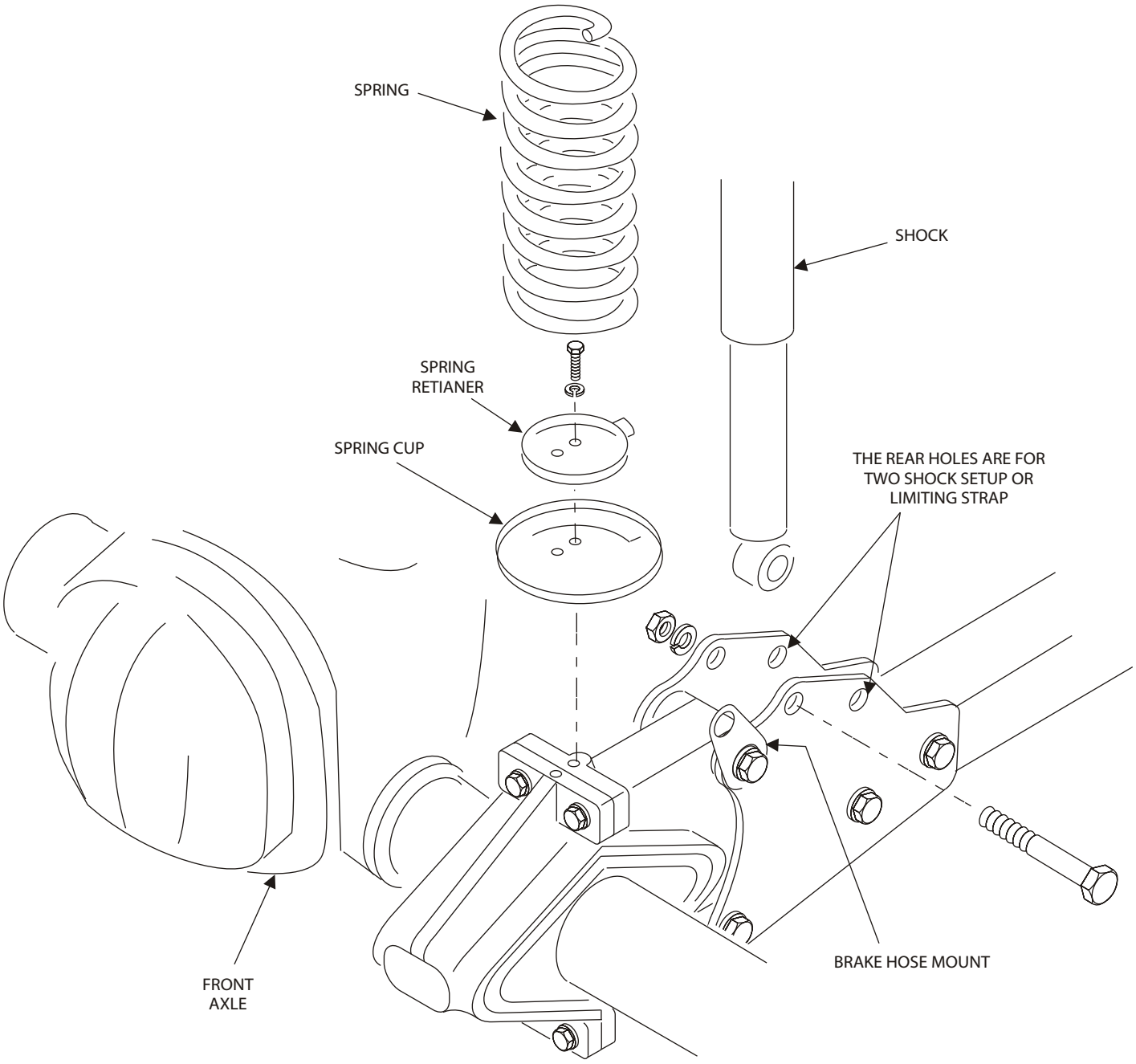
SPRING
SHOCK
SPRING
RETIANER
SPRING CUP
THE REAR HOLES ARE FOR
TWO SHOCK SETUP OR
LIMITING STRAP
FRONT
AXLE
BRAKE HOSE MOUNT

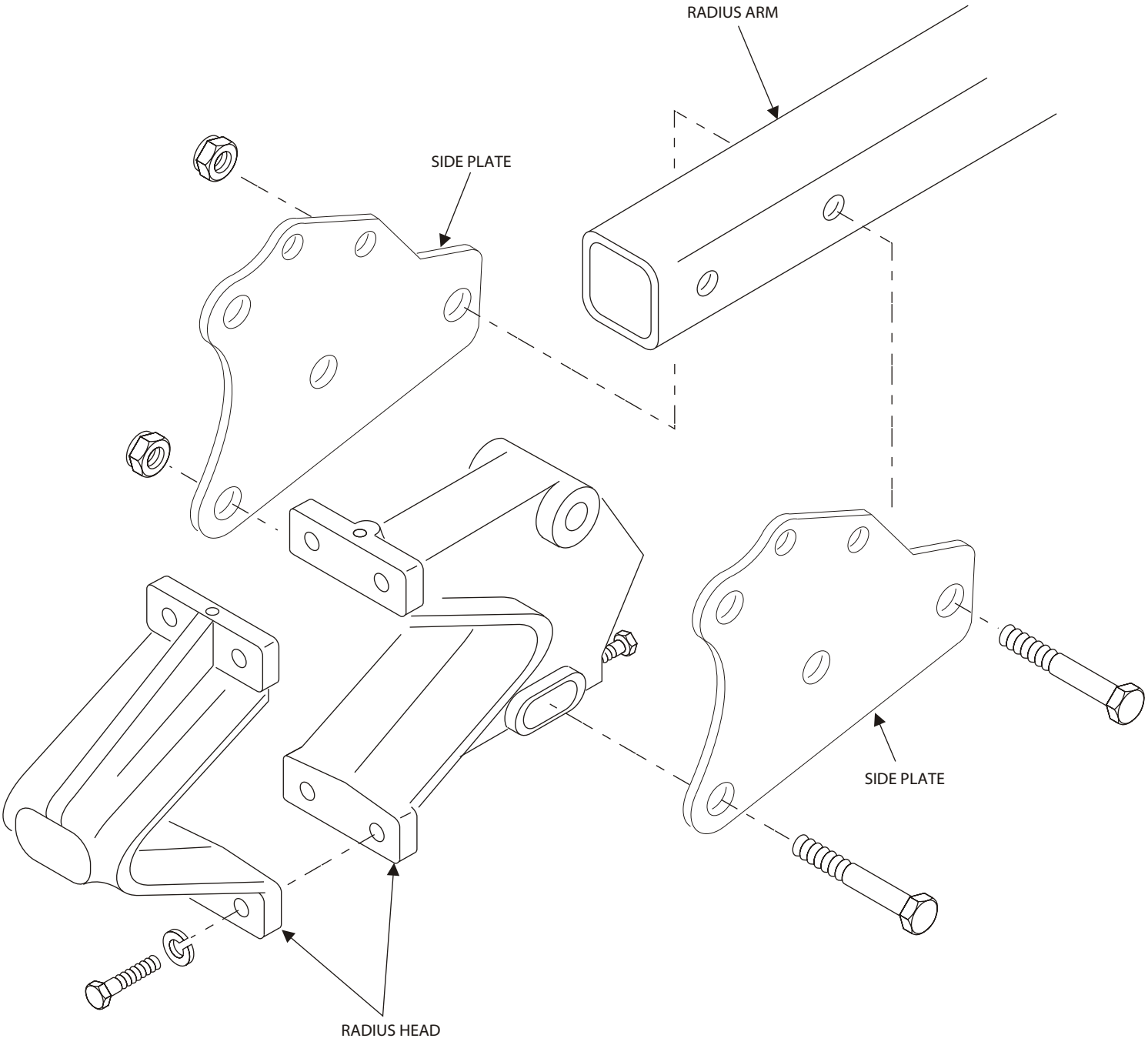
RADIUS ARM
SIDE PLATE
SIDE PLATE
RADIUS HEAD

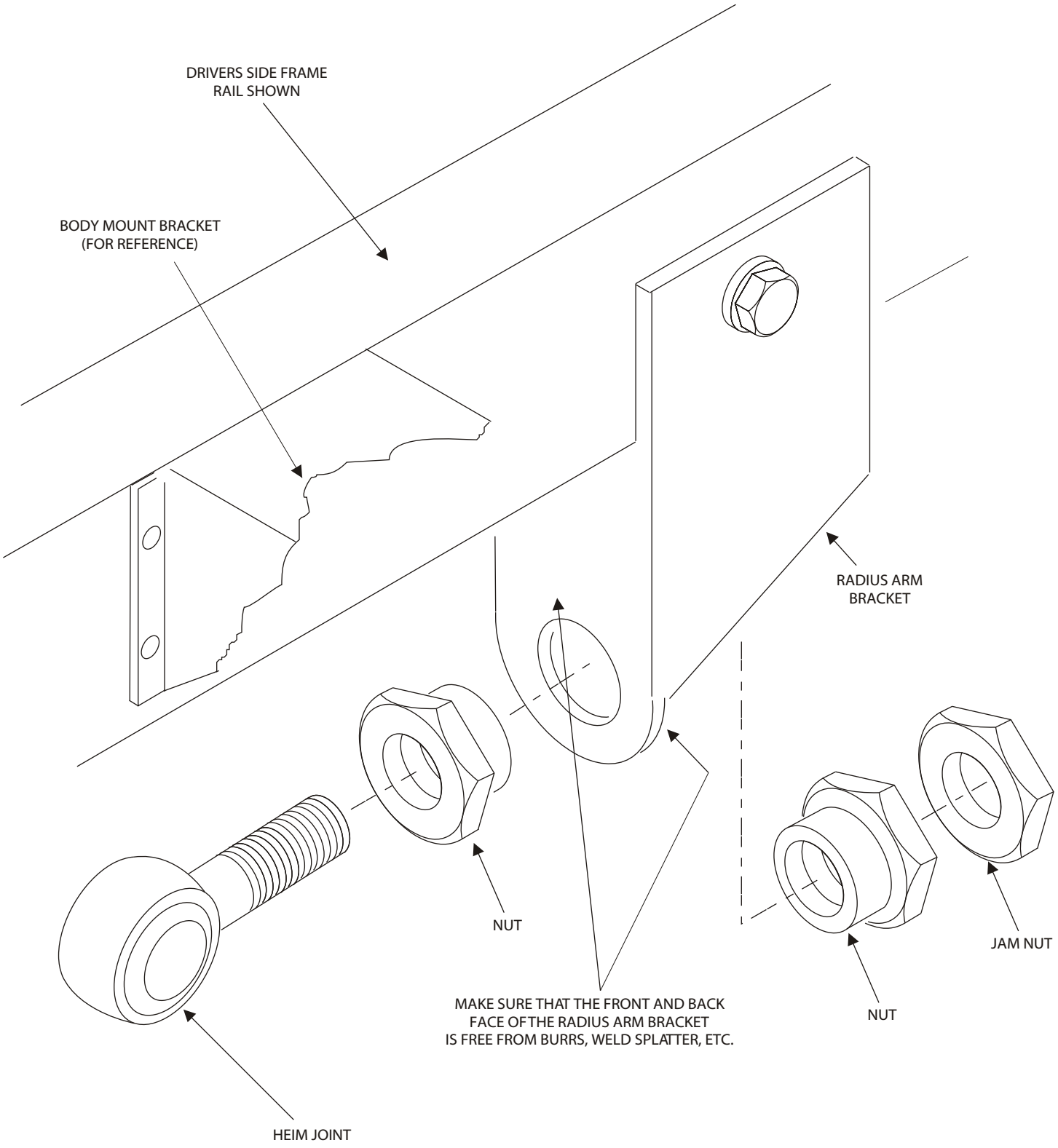
DRIVERS SIDE FRAME
RAIL SHOWN
BODY MOUNT BRACKET
(FOR REFERENCE)
RADIUS ARM
BRACKET
NUT
JAM NUT
NUT
MAKE SURE THAT THE FRONT AND BACK
FACE OF THE RADIUS ARM BRACKET
IS FREE FROM BURRS, WELD SPLATTER, ETC.
HEIM JOINT

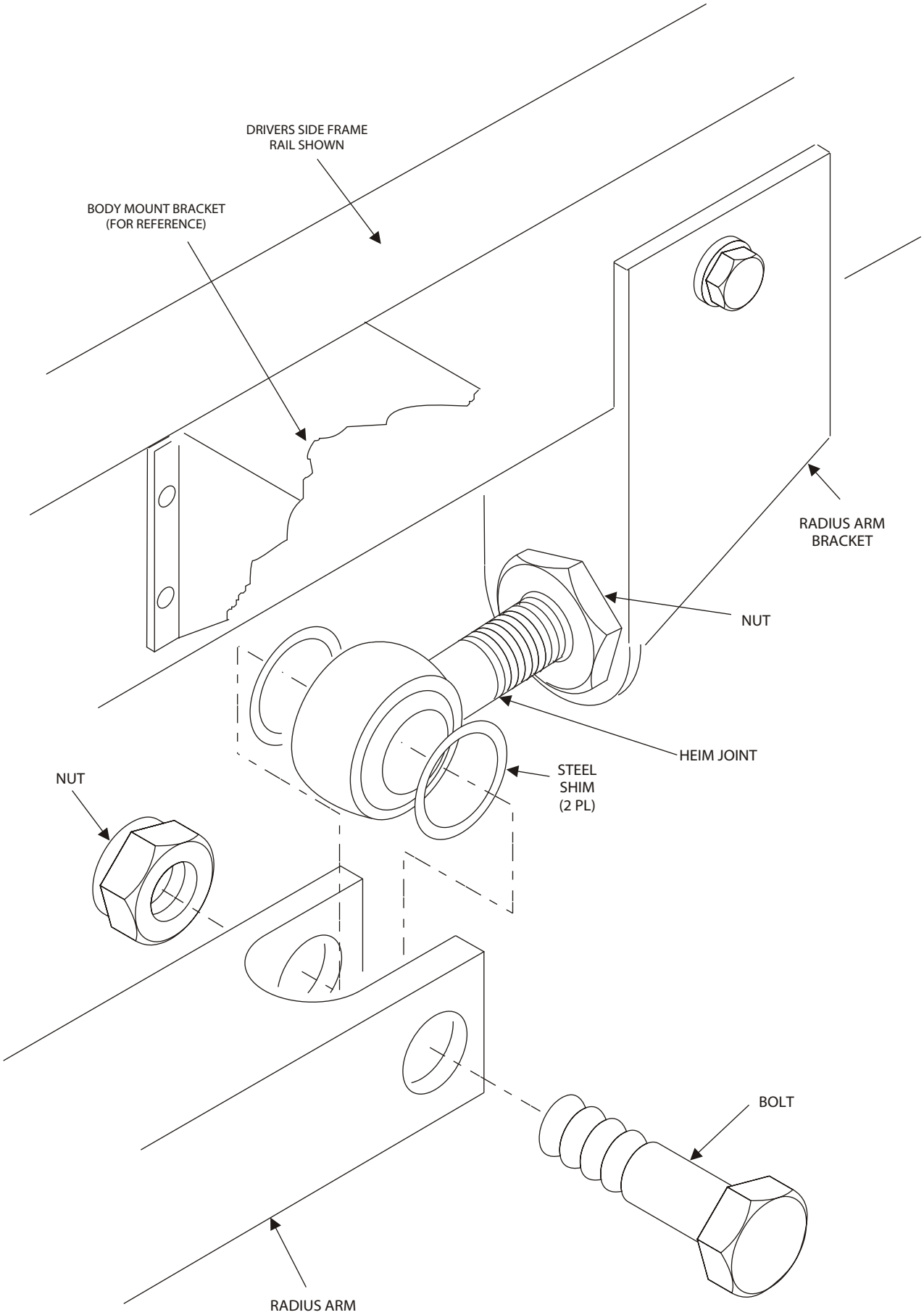
DRIVERS SIDE FRAME
RAIL SHOWN
BODY MOUNT BRACKET
(FOR REFERENCE)
RADIUS ARM
BRACKET
NUT
HEIM JOINT
STEEL
SHIM
(2 PL)
NUT
BOLT
RADIUS ARM